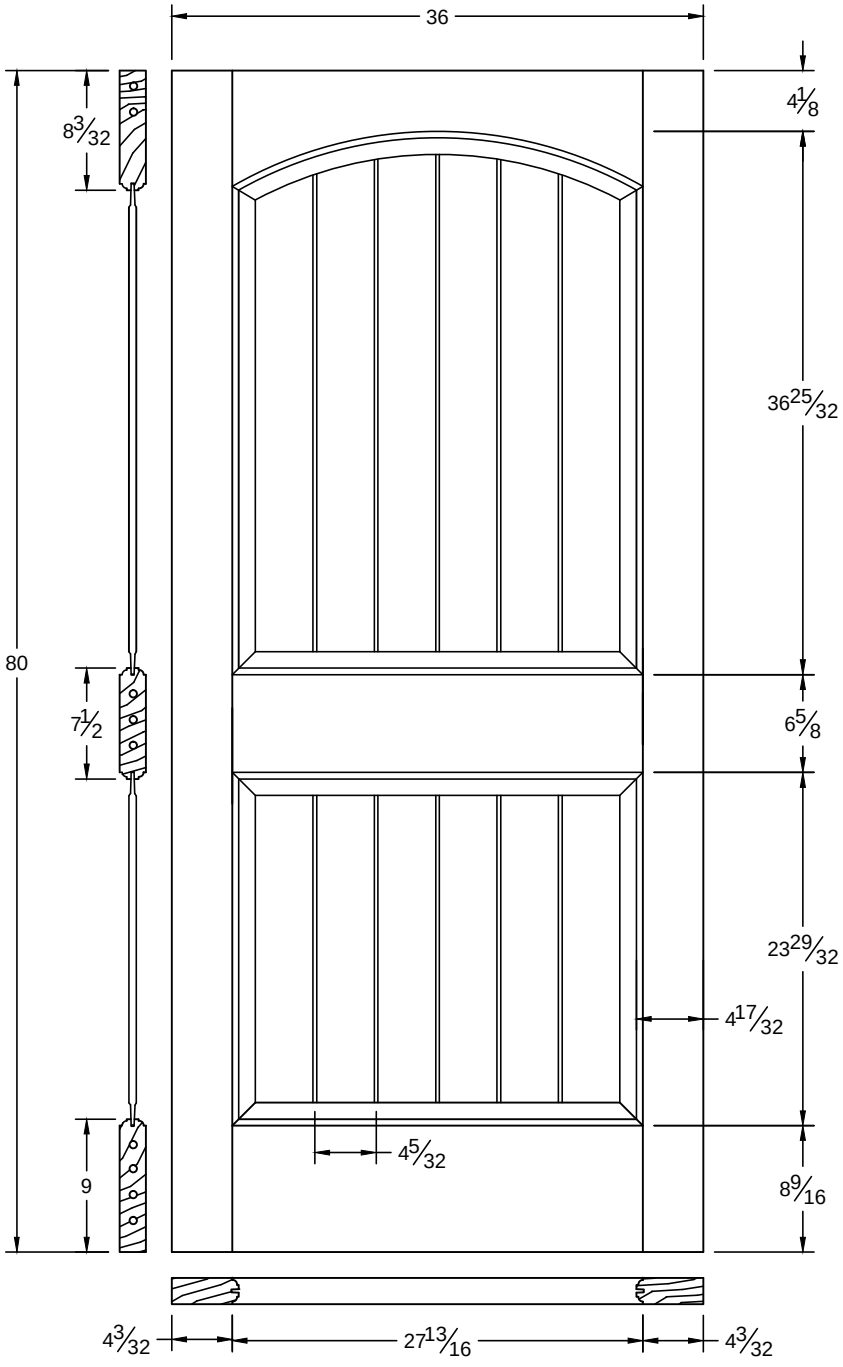

This drawing contains information which is the property of Woodgrain Millwork, Inc. This drawing is received on confinence and contents may not be disclosed without the prior written consent of Woodgrain Millwork, Inc.

802 vplk

Draw #:	Ovolo 802_36_80 vplk
Date:	08 - 17 - 12
Drawn By:	T Doughty

woodgrain doors

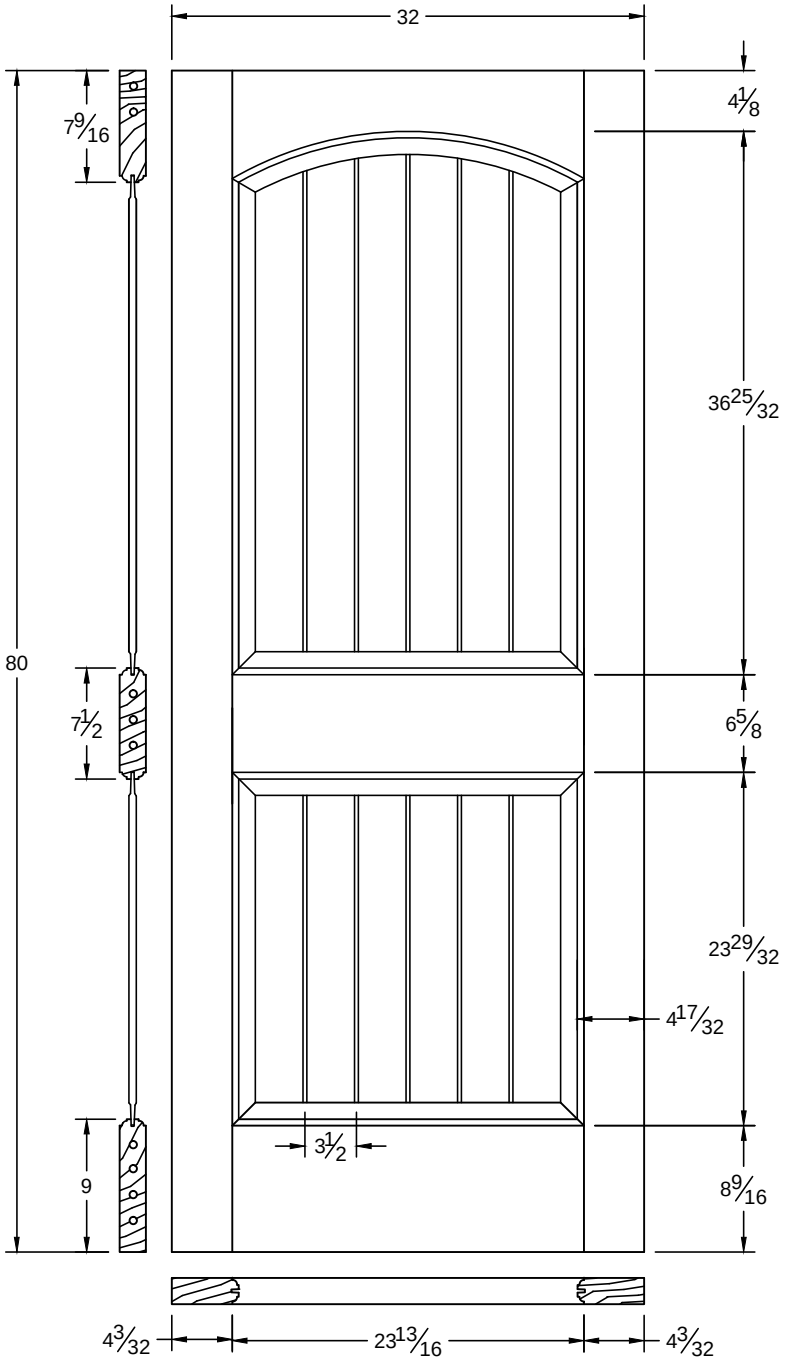

This drawing contains information which is the property of Woodgrain Millwork, Inc. This drawing is received on confinence and contents may not be disclosed without the prior written consent of Woodgrain Millwork, Inc.

802 vplk

Draw #:	Ovolo 802_32_80 vplk
Date:	08 - 17 - 12
Drawn By:	T Doughty

woodgrain doors

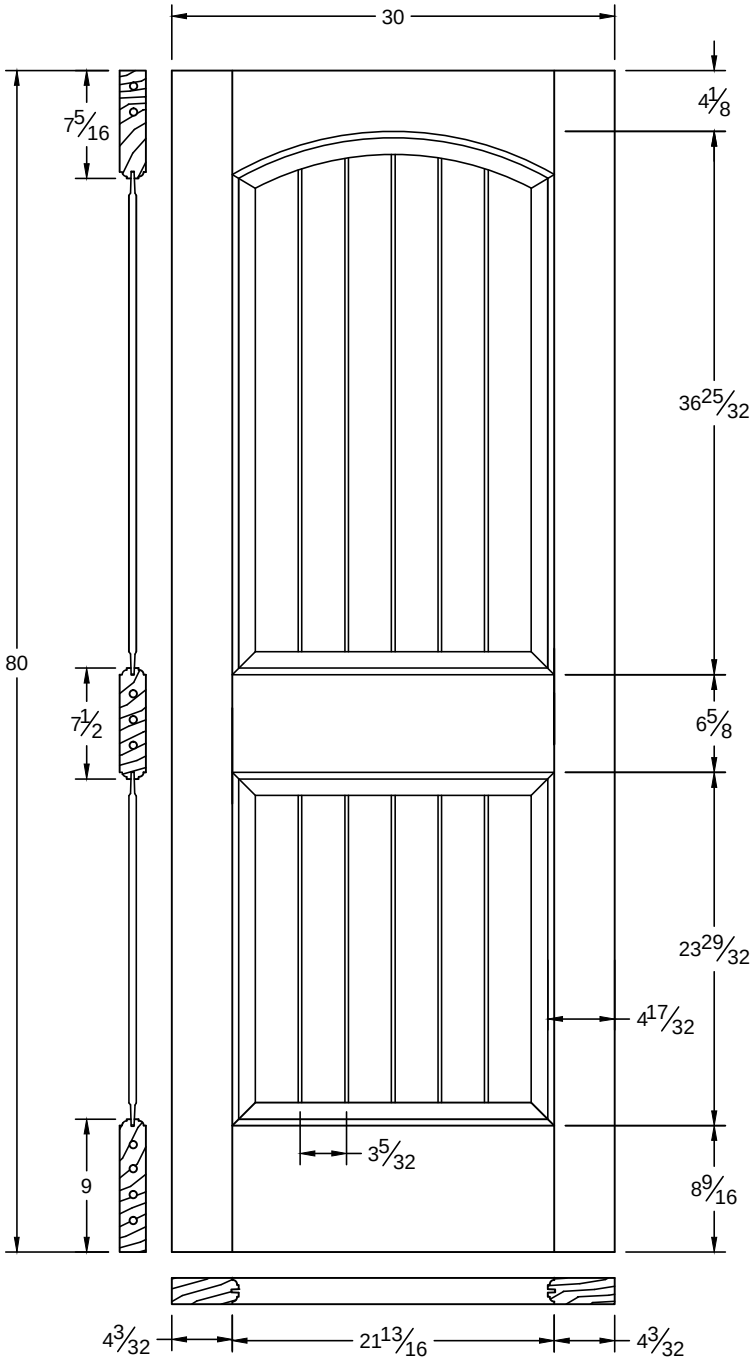

This drawing contains information which is the property of Woodgrain Millwork, Inc. This drawing is received on confinence and contents may not be disclosed without the prior written consent of Woodgrain Millwork, Inc.

802 vplk

Draw #:	Ovolo 802_30_80 vplk
Date:	08 - 17 - 12
Drawn By:	T Doughty

woodgrain doors

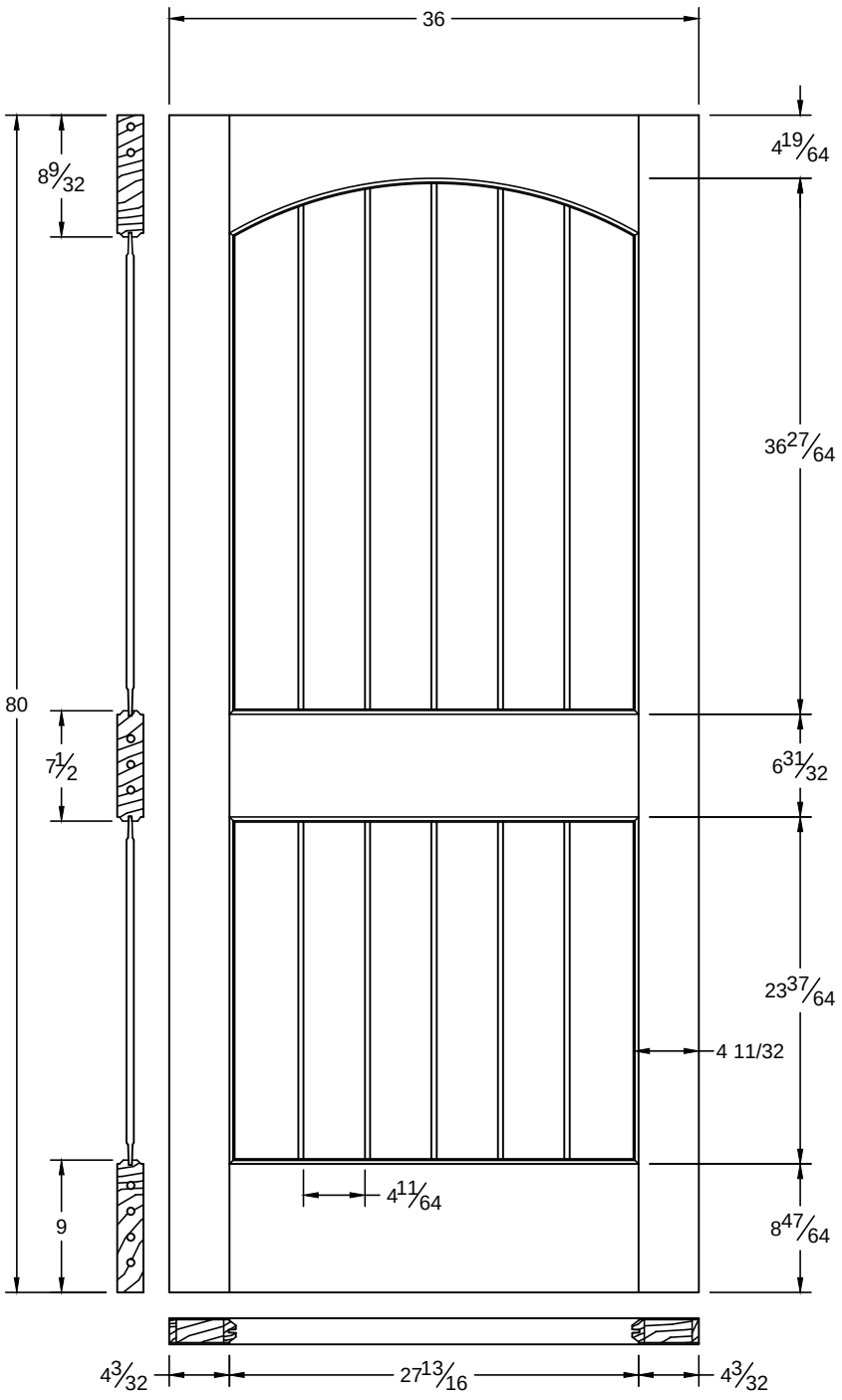

This drawing contains information which is the property of Woodgrain Millwork, Inc. This drawing is received on confinence and contents may not be disclosed without the prior written consent of Woodgrain Millwork, Inc.

802 plk

Draw #:	Taper 802 plk_36_80
Date:	11 - 17 - 12
Drawn By:	T Doughty

woodgrain doors

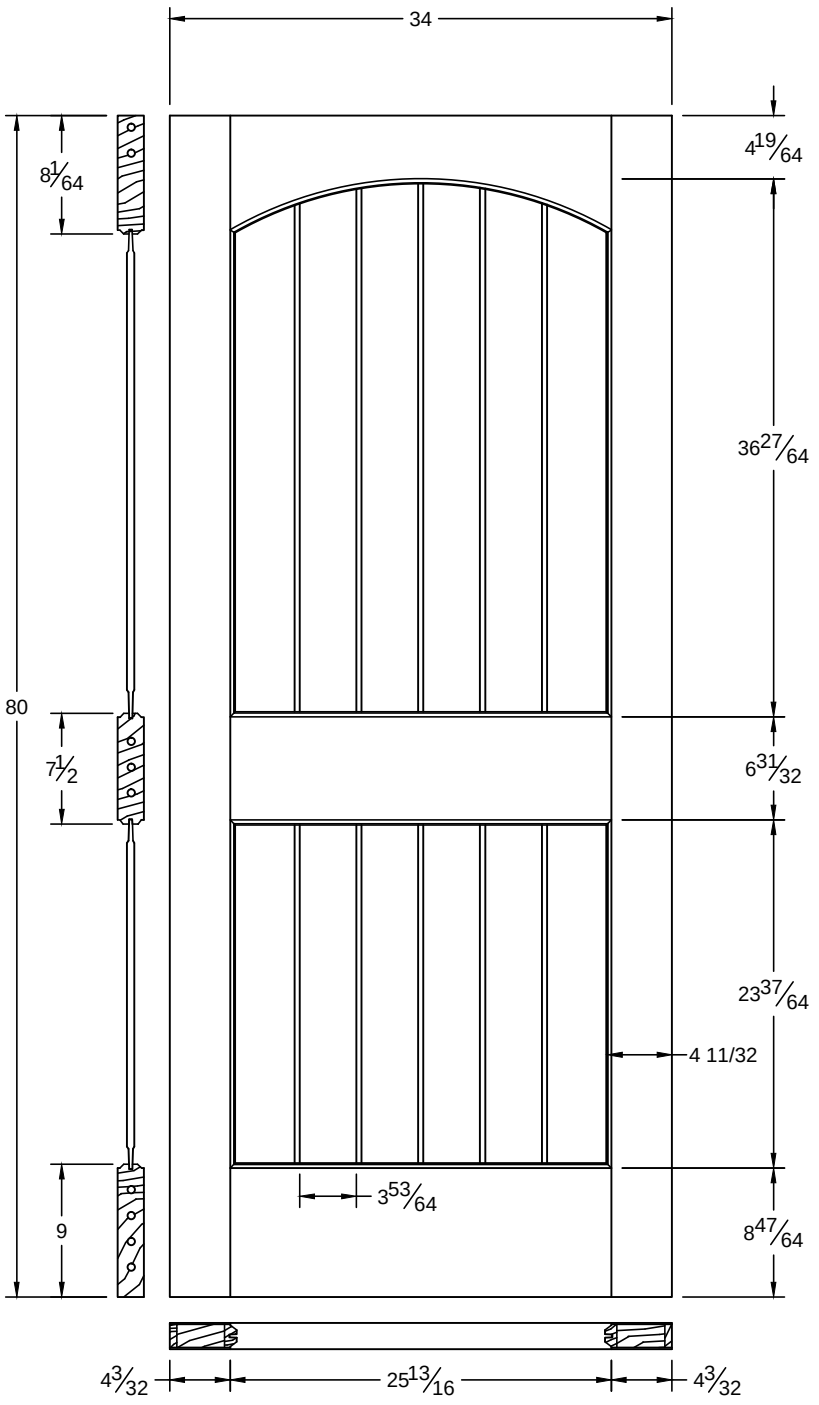

This drawing contains information which is the property of Woodgrain Millwork, Inc. This drawing is received on confinence and contents may not be disclosed without the prior written consent of Woodgrain Millwork, Inc.

802 plk

Draw #:	Taper 802 plk_34_80
Date:	11 - 17 - 12
Drawn By:	T Doughty

woodgrain doors

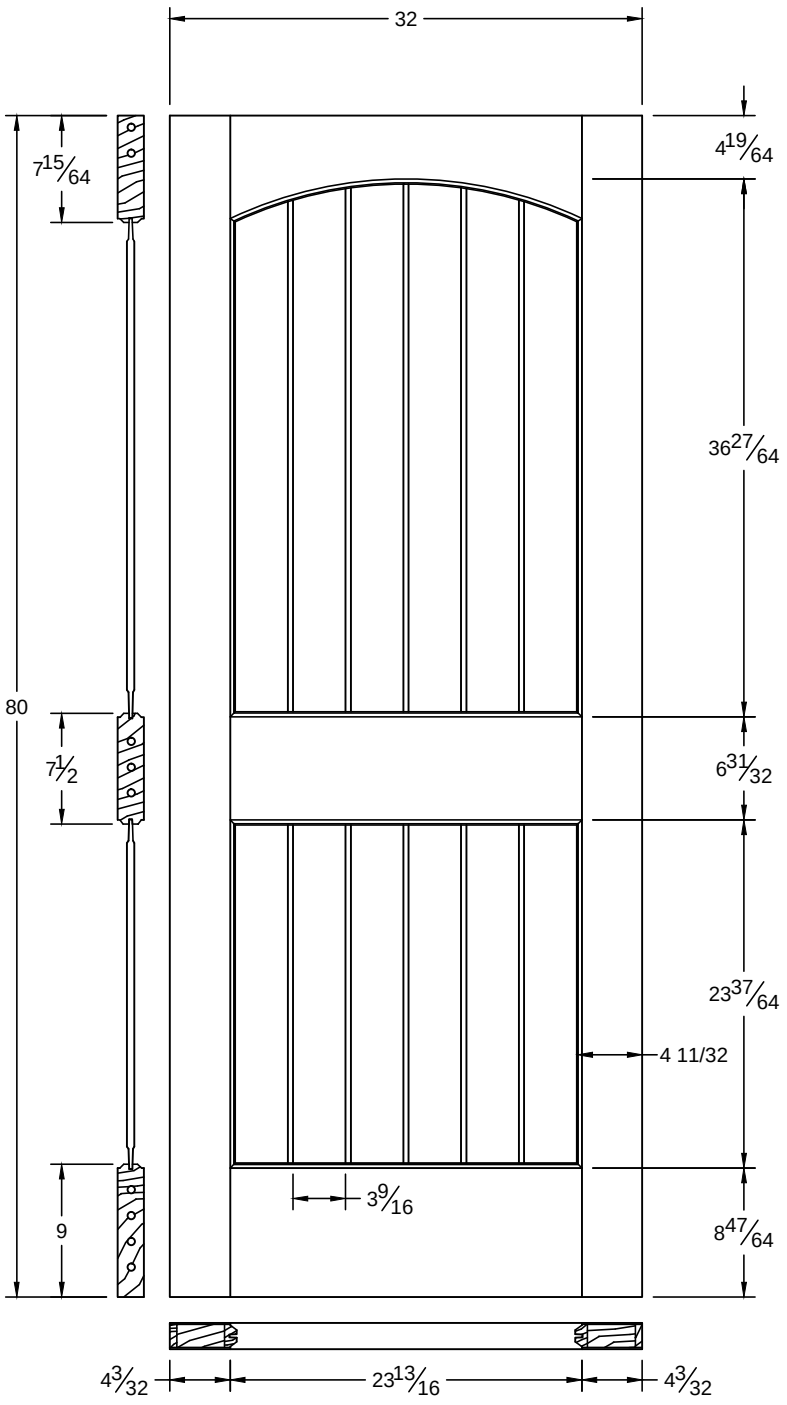

This drawing contains information which is the property of Woodgrain Millwork, Inc. This drawing is received on confinence and contents may not be disclosed without the prior written consent of Woodgrain Millwork, Inc.

802 plk

Draw #:	Taper 802 plk_32_80
Date:	11 - 17 - 12
Drawn By:	T Doughty

woodgrain doors

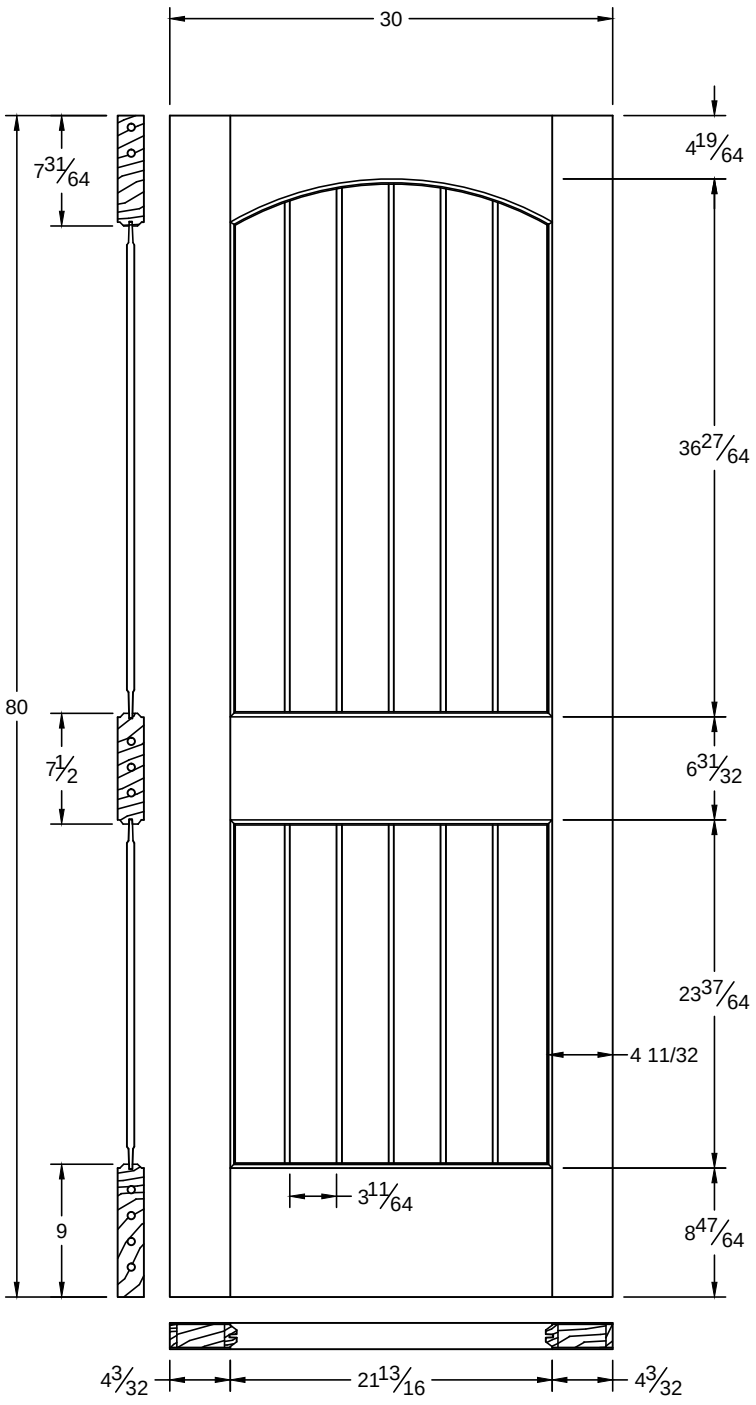

This drawing contains information which is the property of Woodgrain Millwork, Inc. This drawing is received on confinence and contents may not be disclosed without the prior written consent of Woodgrain Millwork, Inc.

802 plk

Draw #:	Taper 802 plk_30_80
Date:	11 - 17 - 12
Drawn By:	T Doughty

woodgrain doors

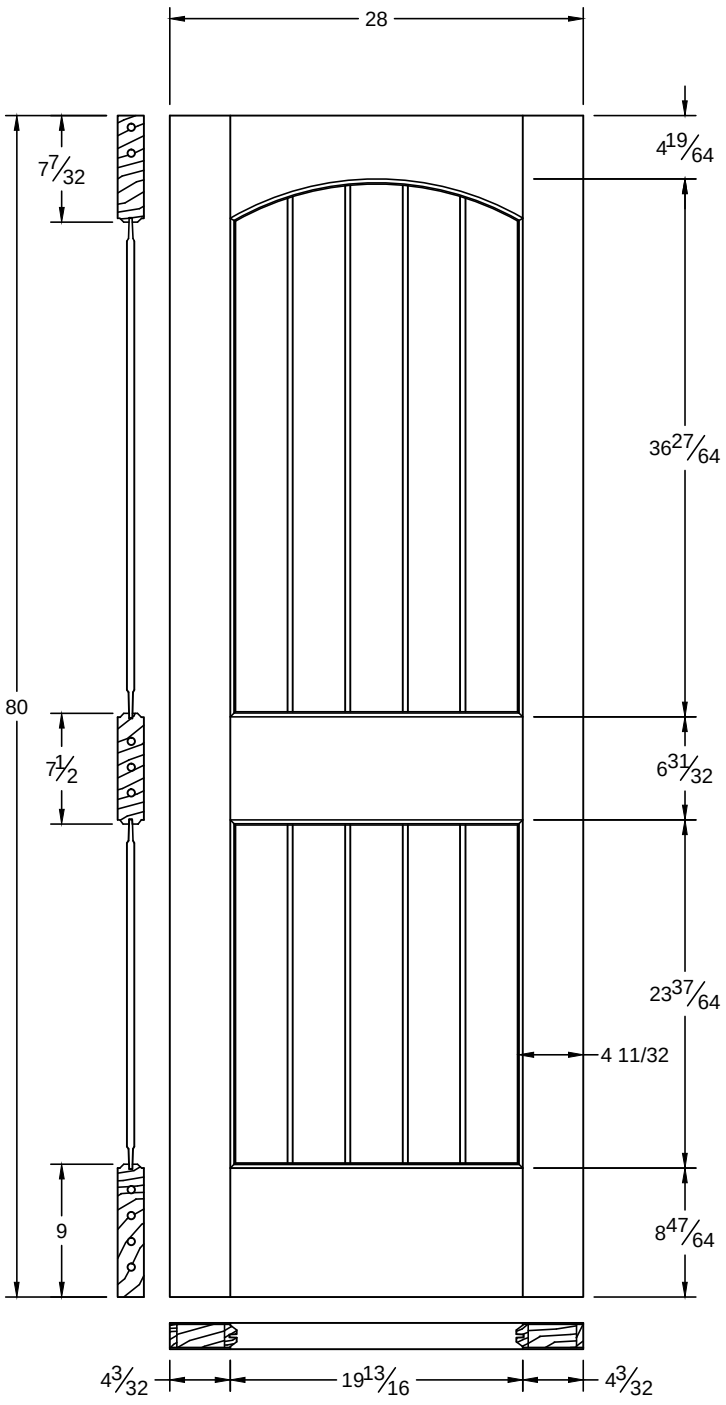

This drawing contains information which is the property of Woodgrain Millwork, Inc. This drawing is received on confinence and contents may not be disclosed without the prior written consent of Woodgrain Millwork, Inc.

802 plk

Draw #:	Taper 802 plk_28_80
Date:	12 - 01 - 12
Drawn By:	T Doughty

woodgrain doors

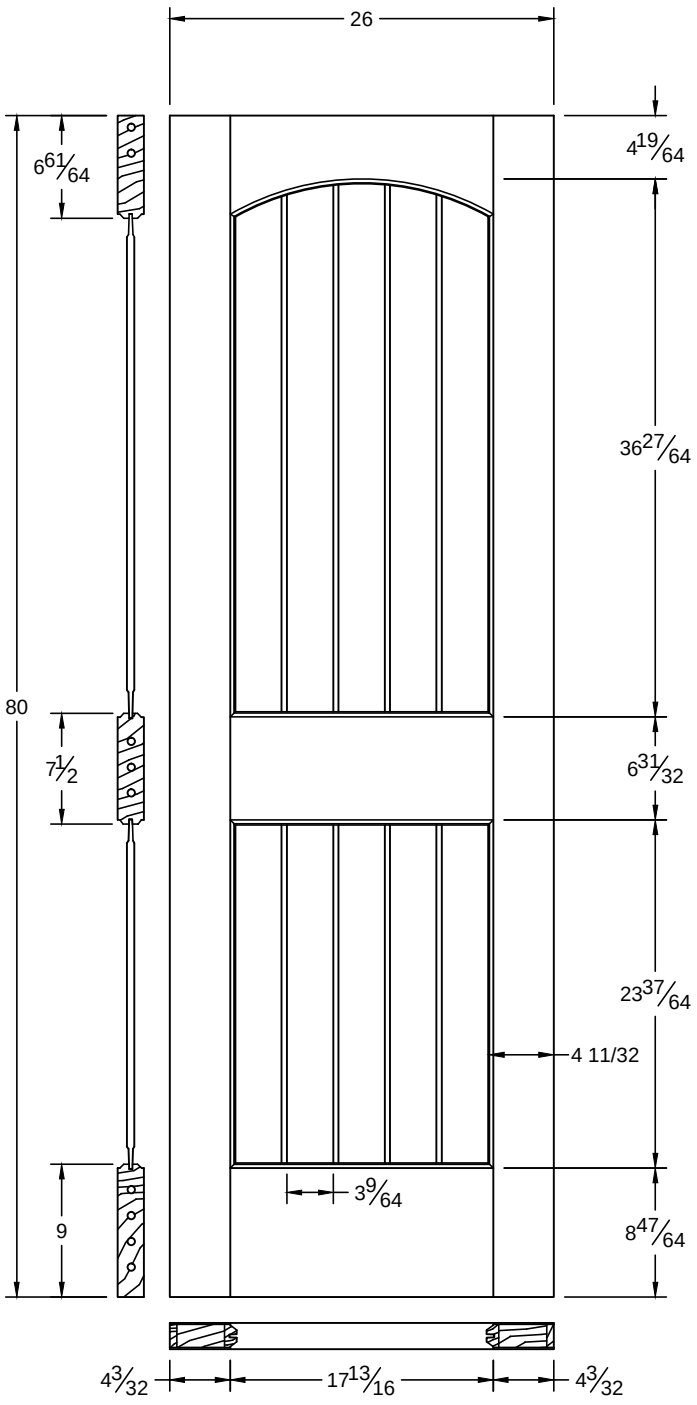

This drawing contains information which is the property of Woodgrain Millwork, Inc. This drawing is received on confinence and contents may not be disclosed without the prior written consent of Woodgrain Millwork, Inc.

802 plk

Draw #:	Taper 802 plk_26_80
Date:	12 - 01 - 12
Drawn By:	T Doughty

woodgrain doors

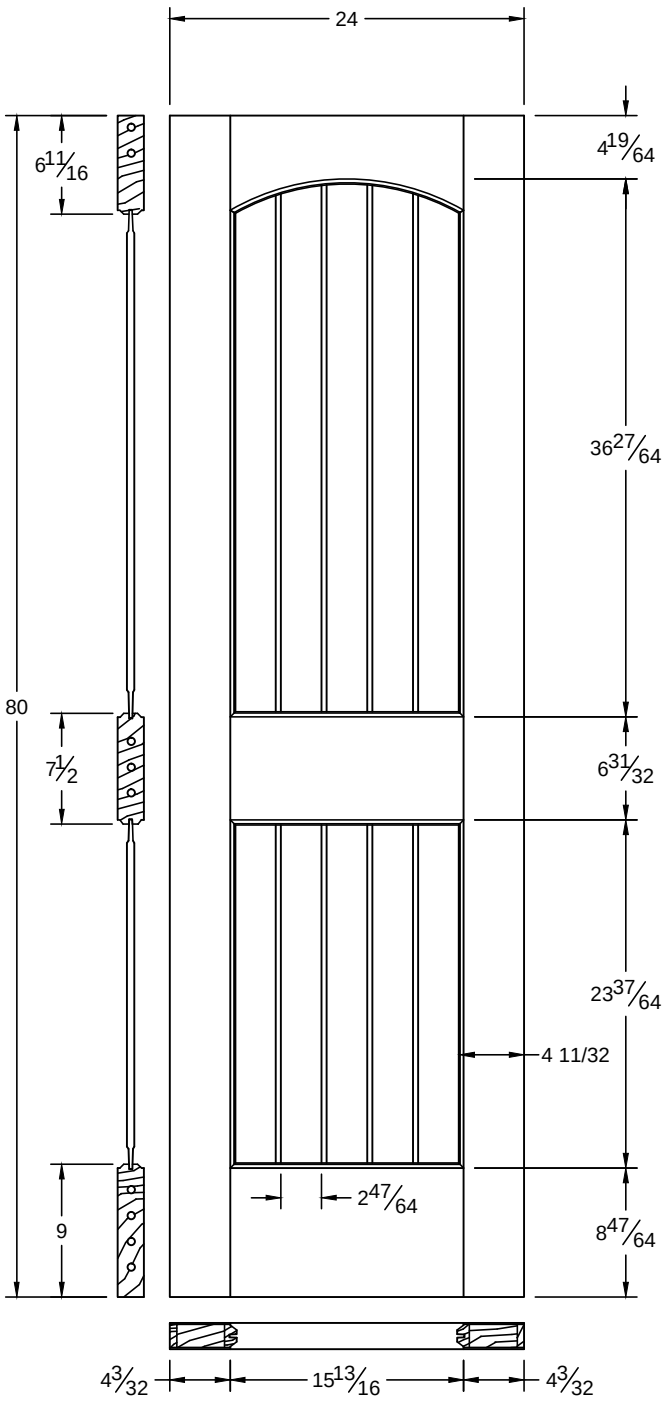

This drawing contains information which is the property of Woodgrain Millwork, Inc. This drawing is received on confinence and contents may not be disclosed without the prior written consent of Woodgrain Millwork, Inc.

802 plk

Draw #:	Taper 802 plk_24_80
Date:	12 - 01 - 12
Drawn By:	T Doughty

woodgrain doors